FCS-FRHCB-086-1

SMA Female Right Angle, Bulk Head, Crimp

Features:
* Low VSWR

Applications:
* Wireless
* Radar
* Instruments
* Electronics

Electrical

Frequency:	DC~3GHz
VSWR:	1.25 max.
Impedance of Dielectric:	5000MΩ min.
Voltage Withstand:	500V DC
Impedance:	50Ω

Mechanical

RF Connector:	SMA female right angle, bulk head, crimp
Mating Cable:	QH280, QE086, QD086, RG316, RG174
Mating Life Cycle:	500 cycles
Outer Conductor:	Gold plated brass
Dielectric:	PTFE
Inner Conductor:	Gold plated beryllium copper

Environmental

Temperature:	-55~+125°C

How To Order

FCS-FRHCB-086-1

Customization is available upon request.

Outline Drawings

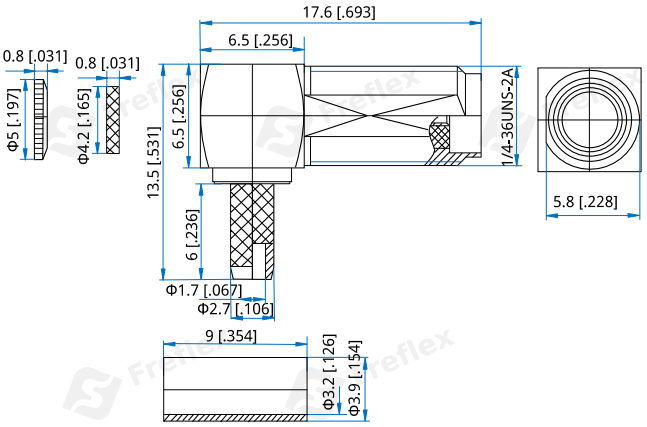

Unit: mm [in]
Tolerance: ±0.2mm [±0.008in]